Dieter’s

Nixie Tube Data Archive

This file is a part of Dieter's Nixie- and display tubes data archive

If you have more datasheets, articles, books, pictures or other information about Nixie tubes or other display devices please let me know.
Thank you!

Document in this file	Burroughs – Bulletin 1104D – Dated March 20, 1969
Display devices in this document	B-5440, B-5440A, B-5441, B-5441A, B-5442, B-5442A, B-5445, B-5448, SK-182, SK-183, SK-184, SK-185, SK-193, SK-194, SK-195, SK-196, SK-197, SK-198, SK-199, SK-200

BULLETIN NO. 1104D
March 20, 1969

NIXIE® NUMERICAL INDICATOR TUBES

TYPES

B-5440	B-5440A
B-5441	B-5441A
B-5442	B-5442A
B-5445	B-5448

The B-5440 NIXIE tube is a gas filled, cold cathode, ultra long life, decimal input, side viewing numerical (0–9) indicator tube having a common anode. The B-5441 is identical to the B-5440 except it has two decimal points (right and left of the numeral) inside the tube, which are independently operable (Note 2).

The B-5442 is available for plus-minus indication.

The B-5445 is mechanically and electrically identical to the B-5440 except the characters are mounted upside down. There are no decimal points available in the B-5445.

The B-5440, B-5441, and B-5442 NIXIE tubes are also available without the top "tip-off" (See Figure 2). These tubes are identified by an "A" suffix following the tube designation (i.e.; B-5440A, B-5441A, B-5442A). The B-5440 and B-5440A series tubes have the same electrical and similar mechanical characteristics except for the differences shown in the outline drawings, Figures 1 and 2.

The B-5448 NIXIE tube (See Figure 3) is an addition to Burroughs B-5440 series. It is similar to the B-5442 with the addition of a character to indicate "overload".

For further information write to Burroughs Corporation, Electronic Components Division, Box 1226, Plainfield, New Jersey 07061.

B-5440 SERIES

B-5440A SERIES

TUBE DESIGNATION	CHARACTERS	FEATURES
B-5440	0–9	Standard B-5440 Series tube
B-5441	0–9	Same as B-5440 except has 2 decimal points
B-5442	+, –	
B-5445	0–9	Same as B-5440 except characters mounted upside down.
B-5448	+, –, ⊕	
B-5440A	0–9	Same as B-5440 except tube has no top "tip-off"
B-5441A	0–9	Same as B-5441 except tube has no top "tip-off"
B-5442A	+, –	Same as B-5442 except tube has no top "tip-off"

TABLE 1. GENERAL CHARACTERISTICS

ELECTRICAL SPECIFICATIONS

ABSOLUTE RATINGS

Ionization Voltage ------ 170 VDC (max) (Note 6)
Supply Voltage -------- 170 VDC (min) (Note 1)
Cathode Current ---------- 3.5 mA (max)
Decimal Point Current (B-5441) ------ 0.7 mA (max)
Cathode Pre-bias Voltage ------ 60 VDC to 120 VDC (Note 7)

TYPICAL OPERATING CONDITIONS (Figure 4)

Supply Voltage ---------- 200 VDC (Note 1)
Series Resistor ---------- 22K ohm (Notes 1 & 8)
Numeral Cathode Current
(B-5440) ---------- 2.5 mA (1.5 to 3.0 mA)
(B-5441) ---------- 2.5 mA (1.5 to 3.0 mA)
Decimal Point Cathode Current
(B-5441) ---------- 0.5 mA (nom) (Note 2)
Cathode Pre-bias Voltage ---- 60 VDC (Notes 2b & 7)

MECHANICAL CHARACTERISTICS

Outline Drawing ---------- Figures 1, 2, 3
Pin Connections ---------- Table 2
Mounting ---------- Note 3
Sockets (Table 5) -------- Figures 7, 8, 9, 10, 11, & 12 Note 5
Recommended Printed Circuit Board Layout ---------- Figure 6, Notes 4 & 5
Printed Circuit Pattern Layout Figure 5
Color ---------- Neon Red
Life (Dynamic) ---------- 200,000 hrs
Brightness ---------- 200 foot lamberts

Burroughs

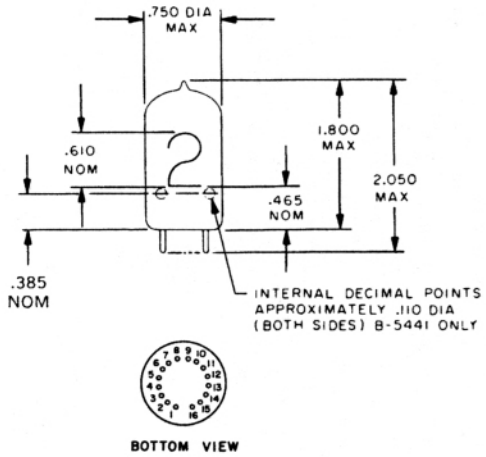

FIGURE 1. OUTLINE DRAWING, B-5440A (Note 3)

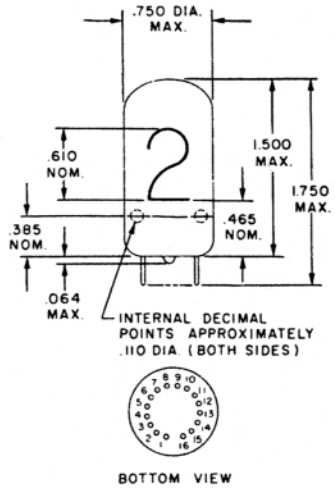

FIGURE 2. OUTLINE DRAWING, B-5440 (Note 3)

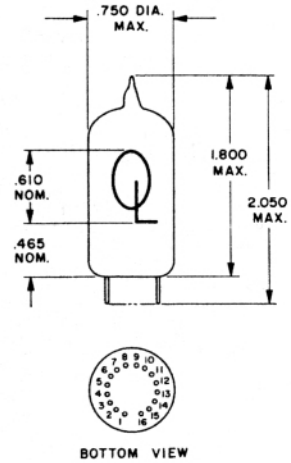

FIGURE 3. OUTLINE DRAWING, B-5448

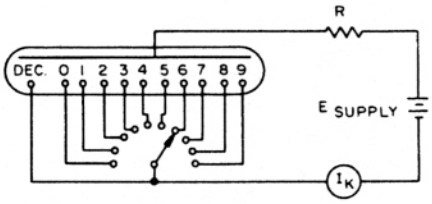

FIGURE 4. TEST CIRCUIT (See notes 1, 2a and 2b)

SUPPLY VOLTAGE (Vdc)	170	200
Decimal Point Resistor (KΩ)	47	100

TABLE 3. DECIMAL POINT CATHODE RESISTOR (See note 2b)

PIN	CONNECTION	PIN	CONNECTION
1	ANODE	9	K3
2	K1	10	K4 (0)***
3	K2 (–)**	11	RIGHT DEC. PT.*
4	K9	12	K5
5	K7	13	K6 (+)**
6	LEFT DEC.PT.*	14	K0
7	K8	15	INT. CONN.
8	INT. CONN.	16	INT. CONN.

*With B-5441 only, otherwise int. conn.

**The B-5442 Only – Anode is Pin 1.

***The B-5448 Only, +- Anode Same As 5442.

TABLE 2. TERMINAL CONNECTIONS

SUPPLY VOLTAGE (Vdc)	170	200	250	300
Anode Resistor B-5440 (KΩ)	10	22	43	62
Anode Resistor B-5441 (KΩ)	10	20	39	56

TABLE 4. ANODE RESISTORS (See notes 1 and 2a)

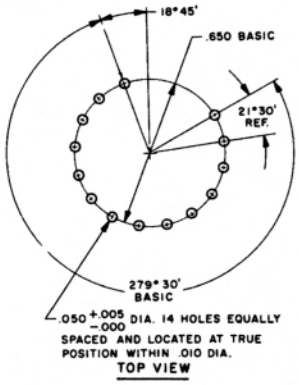

FIGURE 5. P/C BOARD PATTERN LAYOUT (See note 5)

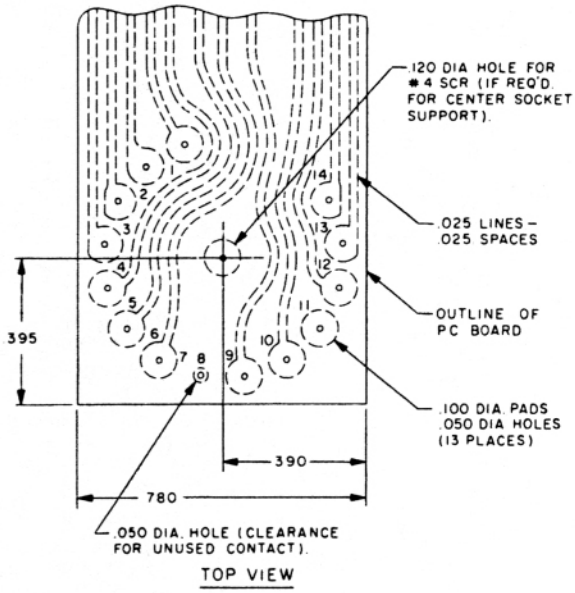

FIGURE 6. RECOMMENDED PRINTED CIRCUIT BOARD LAYOUT

NOTES

1. The minimum supply voltage should be 170 VDC, however, the use of the highest voltage available with an appropriate series resistor is recommended.
2. The decimal points in the B-5441 should be used as follows:
   a. When a numeral is always "on" — use an anode resistor as specified in Table 4.
   b. When a numeral and a decimal point will not be lighted at the same time (numeral and decimal point is lighted alone) — use an anode resistor specified in Table 4 and insert a resistor in series with the decimal point cathode, as specified in Table 3. Note: In this mode of operation, the Supply Voltage cannot exceed 200V and the Pre-bias Voltage is 100V minimum.
3. For proper viewing, the tube should be oriented so that the keyway is directly opposite and away from the viewer.
4. The recommended printed circuit board layout for the B-5441, B-5441A socket is shown with a run to terminal 6 (left decimal point) and no run to terminal 11 (right decimal point). If terminal 11 is to be used instead of terminal 6, omit the run to terminal 6, reposition runs 7, 9 and 10, and add a run to terminal 11. For the Type B-5440, B-5440A, the run can be omitted. See Figure 6.
5. In order to use the printed circuit layout shown, contacts 15 and 16 of the SK-182 — SK-185 sockets must be removed.
6. Ionization Voltage: Voltage necessary for breakdown between anode and cathode.
7. Pre-bias Voltage is the potential difference between "on" and "off" cathodes. It should be sufficiently high to avoid objectional background glow and yet not so high as to cause the "off" cathodes to function as anodes.
8. The anode series limiting resistor can be calculated on the basis of an anode current of 2.5 mA for the B-5440 and 2.8 mA for the B-5441, B-5441A, and a tube voltage drop of 145V (B-5440, B-5440A)/142V (B-5441, B-5441A). (Sustaining Voltage)
9. Contacts are not inserted into positions 15 and 16.
10. All tolerances to be $\pm$.005 unless otherwise specified.

SOCKETS

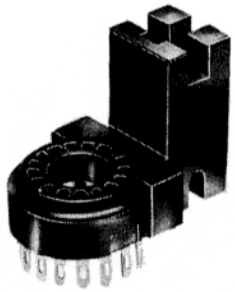

SK-182 — SK-200

There are three basic types of sockets for the B-5440 series NIXIE tubes, SK-182 — SK-185 for chassis mounting, SK-194 and SK-196 for "mother board" mounting, SK-197 — SK-200 for right angle mounting.

Each is available in diallylphthalate casting with gold plated contacts or G. P. phenolic casting with cadmium plated contacts, for wiring of PC applications (See Table 5). As shown in the figures below, these sockets can be used in a variety of ways, depending on the particular application.

SOCKET	DIALLYL. WITH GOLD PLATED CONTACTS	G.P. PHENOLIC WITH CADMIUM PLATED CONTACTS	WIRING TYPE	P.C. TYPE	MODULE MOUNTING TYPE	FIGURE NO.
SK-182	X		X			9 & 12
SK-183	X			X		9 & 12
SK-184		X	X			9 & 12
SK-185		X		X		9 & 12
SK-193	X		X			7 & 10
SK-194	X			X		7 & 10
SK-195		X	X			7 & 10
SK-196		X		X		7 & 10
SK-197	X		X		X	8 & 11
SK-198	X			X	X	8 & 11
SK-199		X	X		X	8 & 11
SK-200		X		X	X	8 & 11

TABLE 5. SK-182 — SK-200 SOCKET CHARACTERISTICS

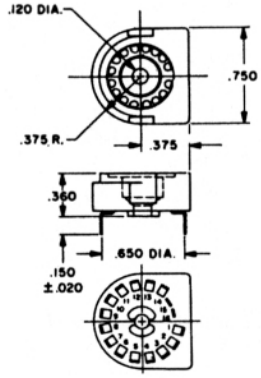

FIGURE 7. SK-194 and SK-196
(See Table 5 and notes 3, 9 and 10)

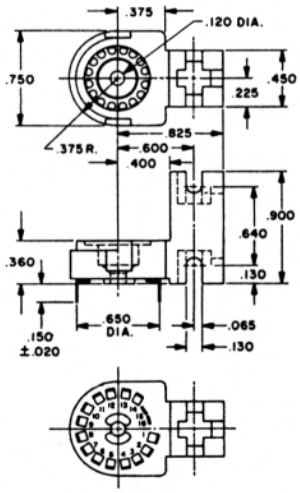

FIGURE 8. SK-197, SK-198, SK-199 and SK-200 (See table 5 and notes 3, 9 and 10)

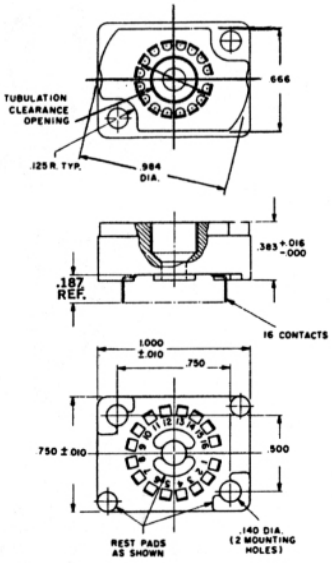

FIGURE 9. SK-182 — SK-185
(See Table 5 and notes 3, 5 and 10)

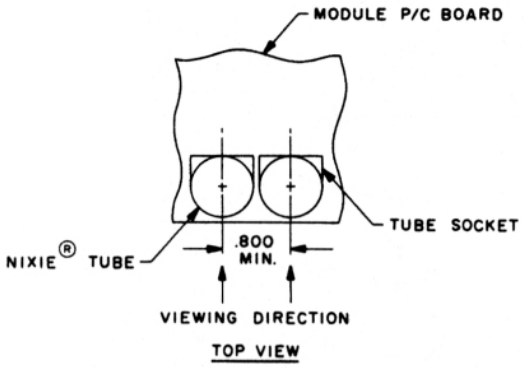

FIGURE 10. SERIES MOUNTING ON DRIVER MODULE BOARD 0.800" MIN. CENTER-TO-CENTER

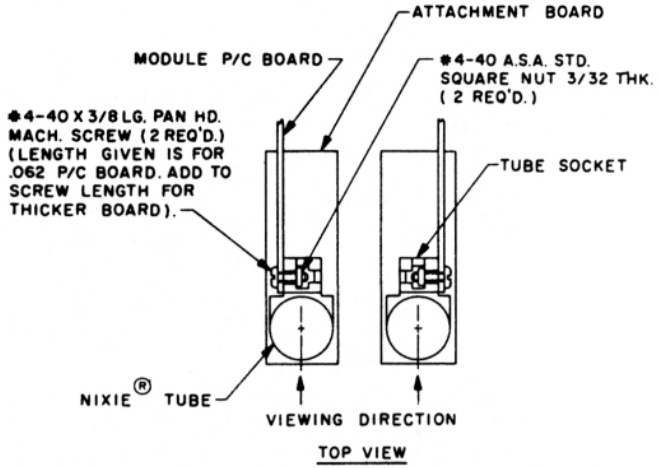

FIGURE 11a. DRIVER MODULE BOARD RIGHT OR LEFT SIDE MOUNTING 0.800" MIN. CENTER-TO-CENTER

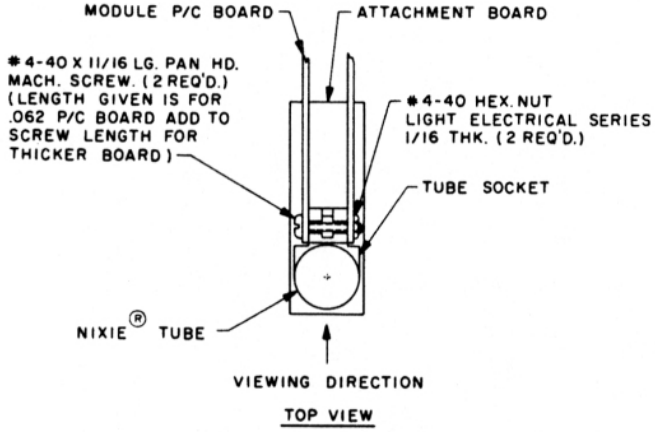

FIGURE 11b. DRIVER MODULE BOARD DUAL RIGHT AND LEFT SIDE MOUNTING 0.800" MIN. CENTER-TO-CENTER

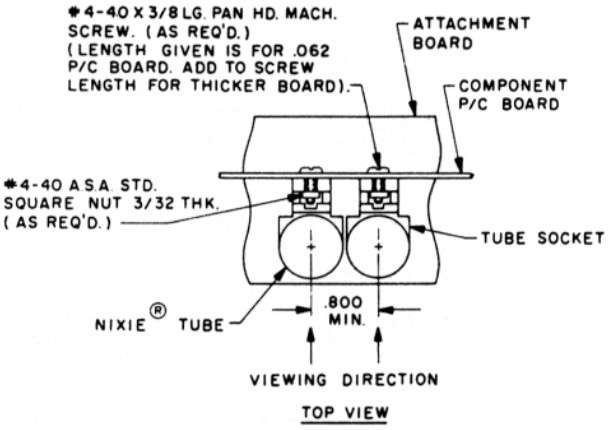

FIGURE 11c. DRIVER MODULE BOARD SERIES MOUNTING 0.800" MIN. CENTER-TO-CENTER

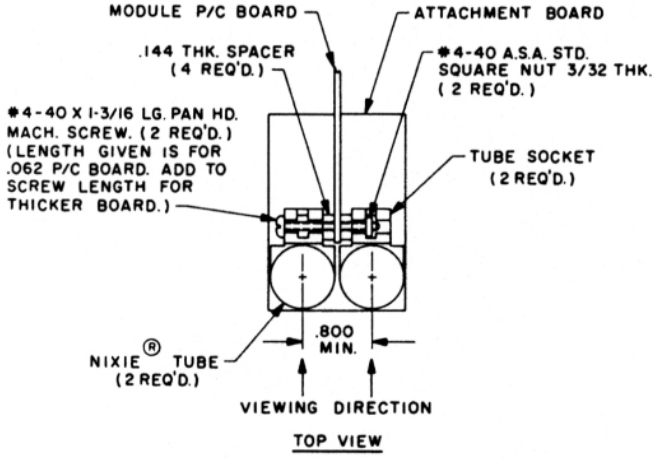

FIGURE 11d. DRIVER MODULE BOARD DUAL SOCKET MOUNTING 0.800" MIN. CENTER-TO-CENTER

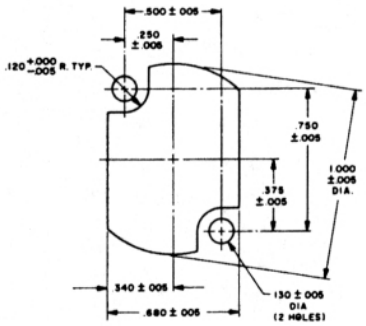

FIGURE 12. SOCKET MOUNTING LAYOUT SK-182 – SK-200 (See note 3)